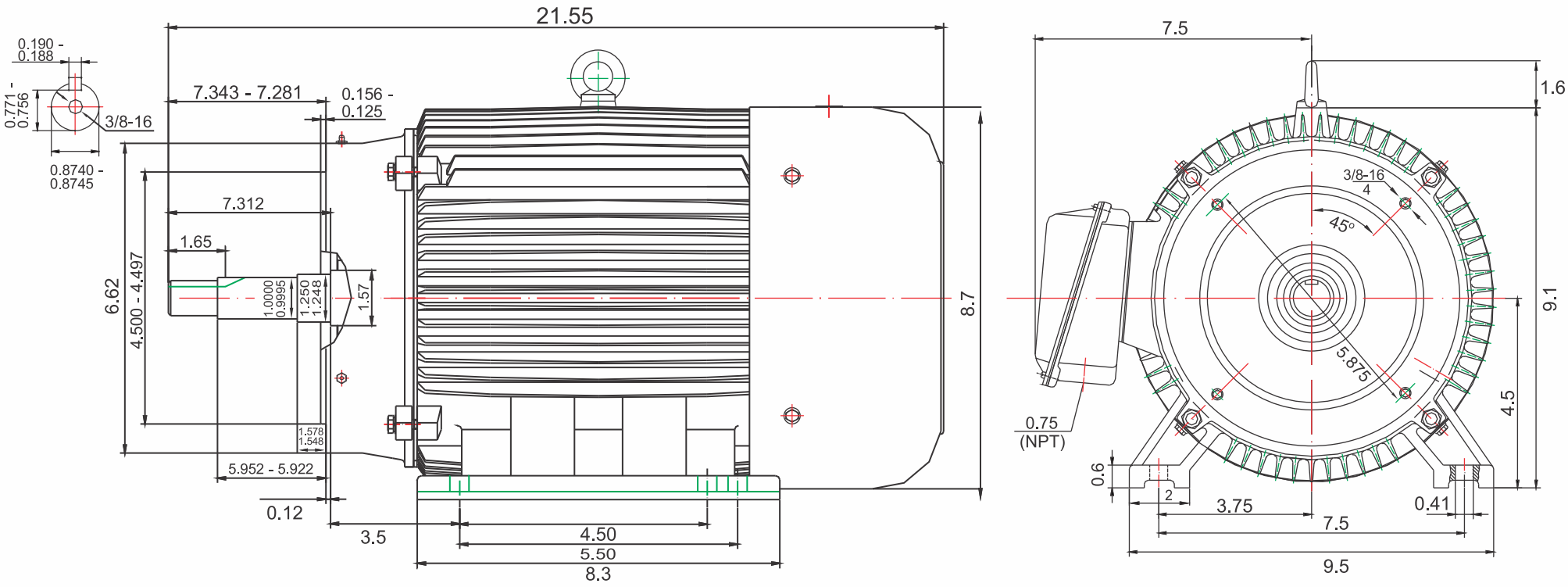


MaxMotion

# NEMA Epact
# JP-Frame 184
# (1800 RPM 5HP)

Measurements are in inches. Drawing is not certified, please contact factory for certification.

www.mep.ca